Slimline® Bedpan Washer Model Flushometer

BPW-1010

Description

Royal® Slimline® Bedpan Washer Water Closet Flushometer, for floor mounted or wall hung top spud bowls. Includes Elbow and Pipe Support for installation when replacing an existing Flushometer with a lower water supply rough-in height (pipe between Elbow and Angle Stop supplied by others).

Flush Cycle

☐ Model BPW-1010-1.6 Low Consumption (1.6 gpf/6.0 Lpf)
☐ Model BPW-1010 Water Saver (3.5 gpf/13.2 Lpf)

Specifications

Quiet, Exposed, Diaphragm Type, Chrome Plated Closet Flushometer with the following features:

- Dual Filtered Bypass
- Metal Oscillating Non-Hold-Open Handle with Triple Seal Handle Packing
- 1" I.P.S. Screwdriver Bak-Chek® Angle Stop
- 1" I.P.S. Chrome Plated Elbow and Solid Ring Pipe Support
- Free Spinning Vandal Resistant Stop Cap
- Adjustable Tailpiece
- High Back Pressure Vacuum Breaker Flush Connection with One-piece Bottom Hex Coupling Nut
- Spud Coupling and Flange for 1½" Top Spud
- Sweat Solder Adapter w/Cover Tube & Cast Wall Flange w/Set Screw
- Diaphragm, Handle Packing, Stop Seat and Vacuum Breaker molded from PERMEX® rubber compound for Chloramine resistance

Bedpan Washer Diverter Assembly with the following features:

- Solid One-piece Body Construction
- Solid Brass Spray Arm
- Counter Balanced Pivot Assembly
- Diverter Valve Wall Support

Valve Body, Cover, Tailpiece and Control Stop shall be in conformance with ASTM Alloy Classification for Semi-Red Brass. Valve shall be in compliance to the applicable sections of ASSE 1037 and ANSI/ASME A112.19.2.

Variations

☐ YI	Two Wall Bumpers (for open front seat without cover)
☐ SG	SaniGuard® Antimicrobial protects Handle and Spray Arm*

* SaniGuard does not protect users or others against disease-causing bacteria.

See Accessories Section of the Sloan catalog for details on these and other Flushometer variations.

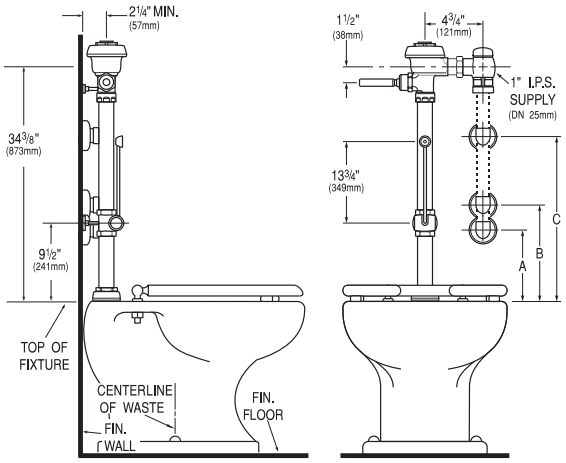

Made In The USA

This space for Architect/Engineer approval

Job Name _____ Date _____

Model Specified _____ Quantity _____

Variations Specified _____

Customer/Wholesaler _____

Contractor _____

Architect _____

The information contained in this document is subject to change without notice.

SLOAN®

Made in the U.S.A.

SLOAN • 10500 SEYMOUR AVE. • FRANKLIN PARK, IL. 60131 Phone: 1-800-982-5839 or 1-847-671-4300 • Fax: 1-800-447-8329 or 1-847-671-4380
www.sloanvalve.com

Copyright © 2014